Simultaneous Measurement of Nonlinearity and Electrochemical Impedance for Protein Sensing Using Two-Tone Excitation

Jon Daniels, Ph.D. Candidate
jon.daniels@stanford.edu

Stanford Department of Electrical Engineering
Stanford Genome Technology Center (SGTC)

Co-authors:
Erik P. Anderson – Stanford EE, SGTC
Prof. Thomas H. Lee – Stanford EE
Prof. Nader Pourmand – SGTC, UC Santa Cruz

IEEE EMBC08 24-Aug-08 SuBT2.5

Affinity Biosensors

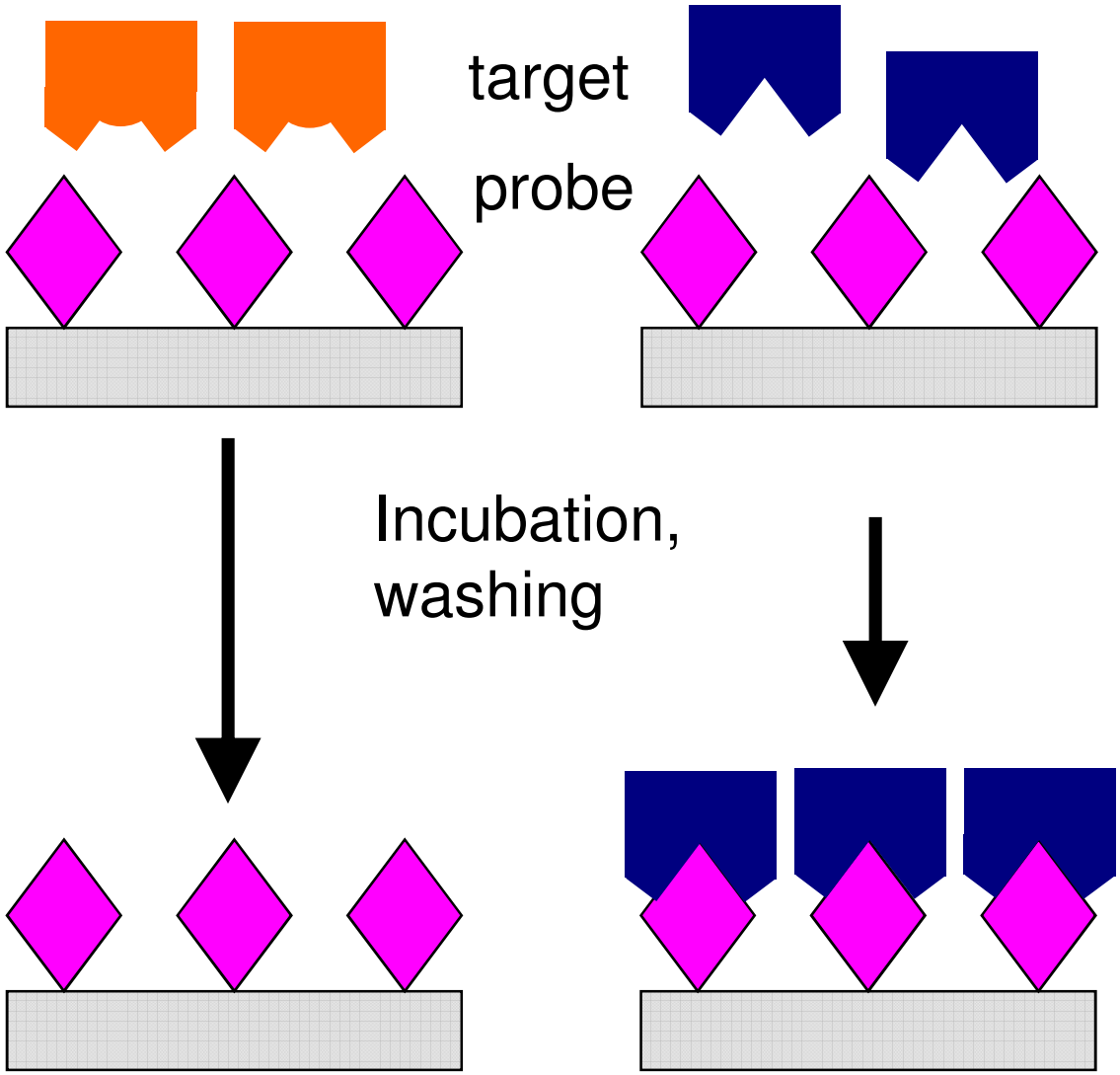

- Immobilized probe selectively captures target
- Target capture changes surface properties
- **Detecting change in surface properties = detecting target**

Impedance for Affinity Biosensors

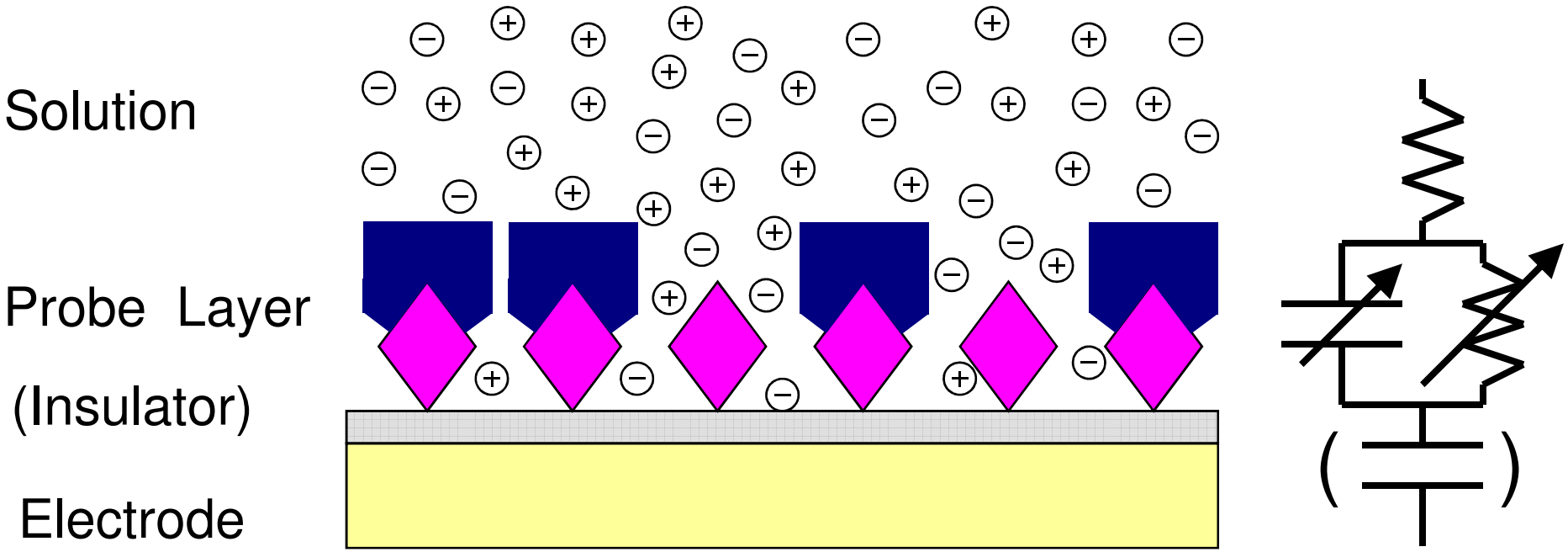

- Binding changes electrical properties of surface
- Selectivity determined by probe layer => platform amenable to various applications by changing probe

Measuring Impedance

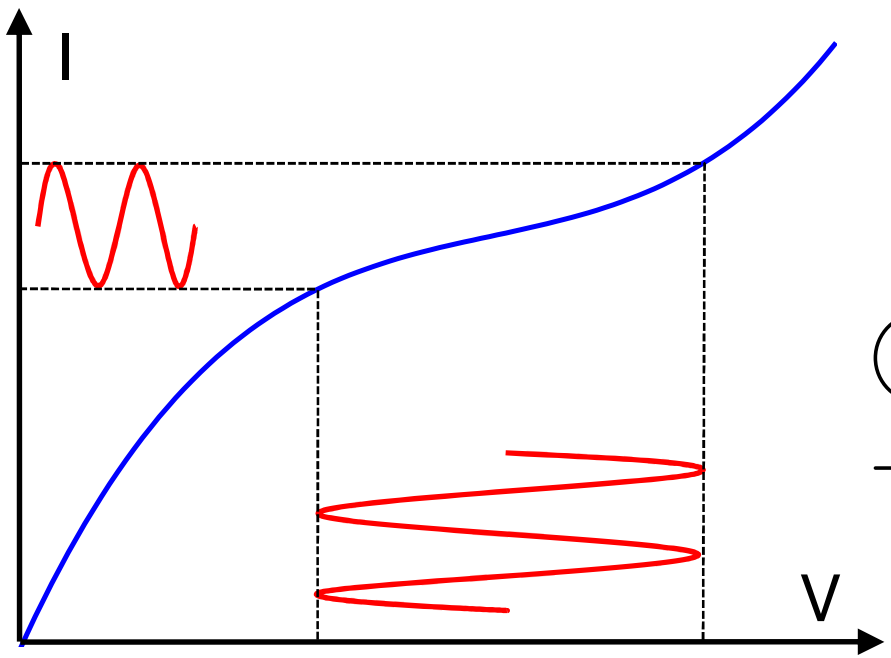

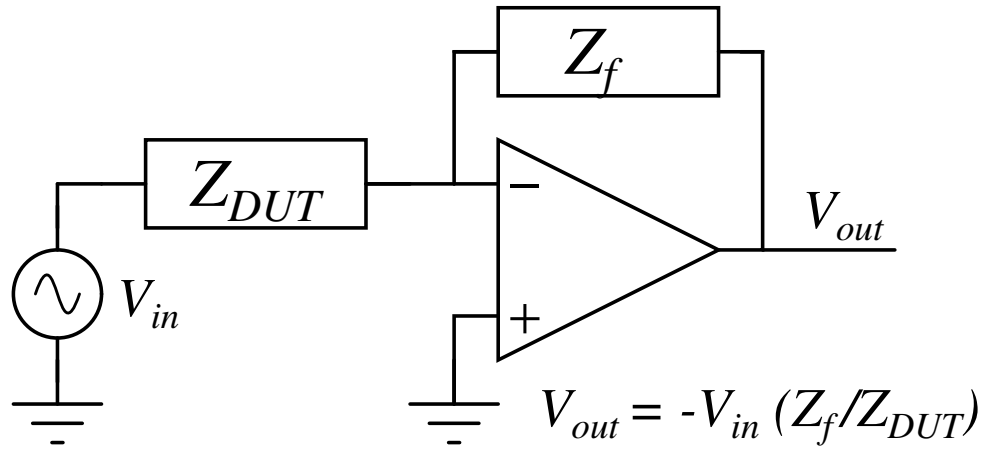

Electrode "Impedance" is Nonlinear

- Electrode-electrolyte impedance depends (quite strongly) on DC bias => nonlinear
- ionic double layer capacitance:

$$C_{dl}(\phi) = \left(228\,\mu\mathrm{F/cm}^2\right)\sqrt{\frac{C_0}{\mathrm{mol/L}}}\left(1+\frac{1}{8}\left(\frac{\phi}{V_T}\right)^2\right)$$

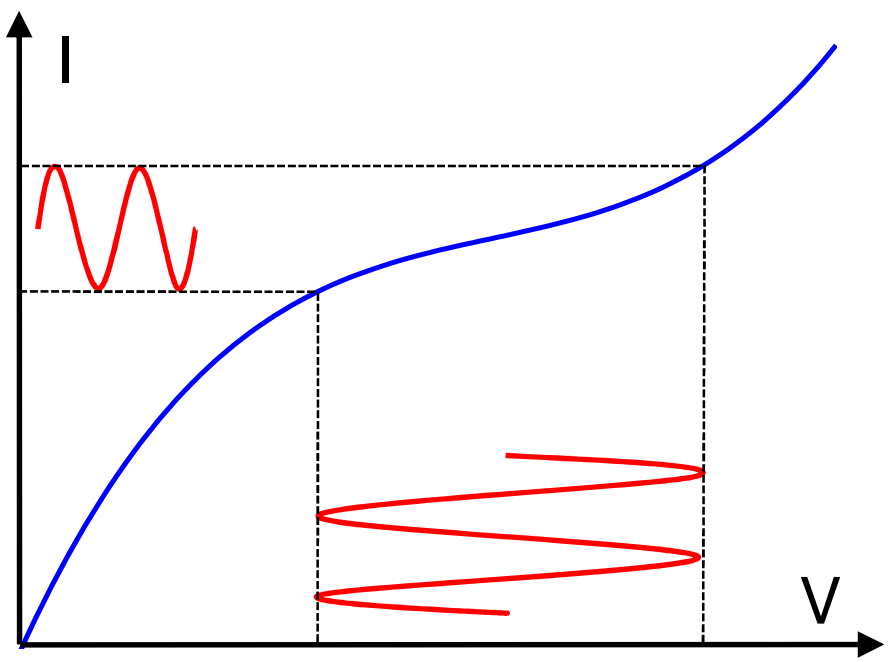

Question #1

Can changes in nonlinearity be used to discriminate target binding?

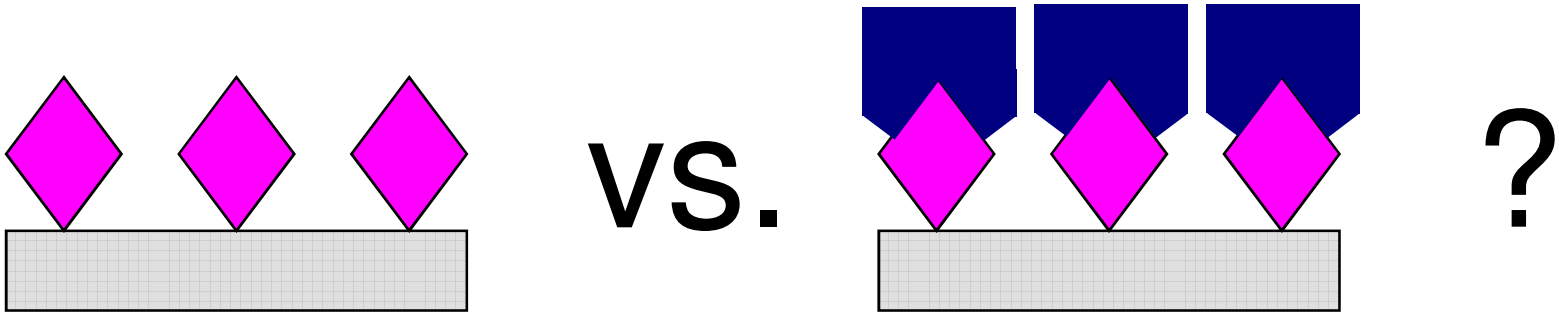

Question #2

Can nonlinearity be quantified without extra measurement time?

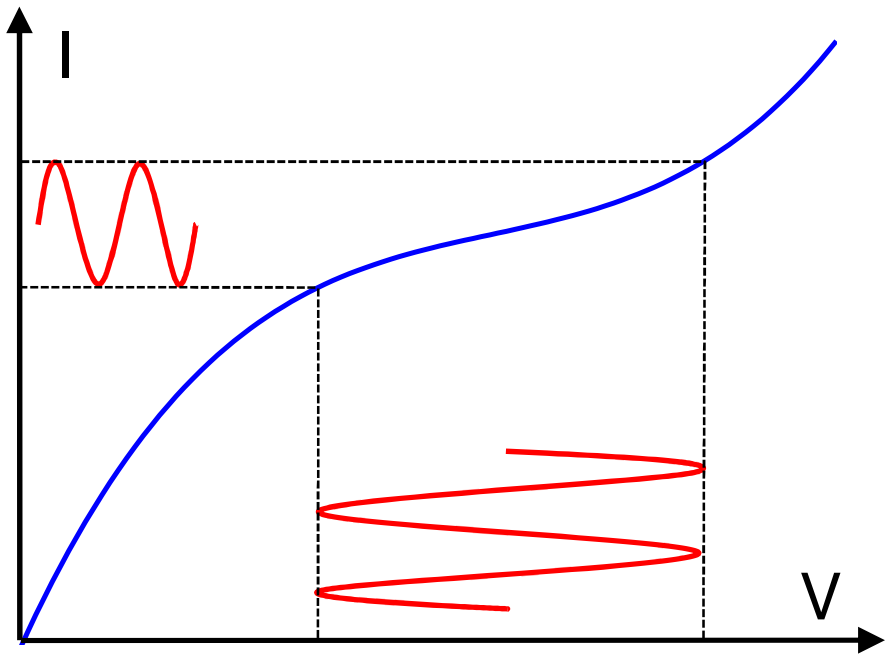

Measuring Nonlinearity w/ 2 tones

$$V_{in} = A\cos(\omega_A t) + B\cos(\omega_B t)$$

Conventional Low frequency

$$Z_{DUT}(\omega) = Z_0(\omega)\left(1 + \alpha_1 V_{in} + \alpha_2 V_{in}^2\right)$$

$$V_{out} = -V_{in}\frac{Z_f(\omega)}{Z_0(\omega)}\frac{1}{1 + \alpha_1 V_{in} + \alpha_2 V_{in}^2}$$

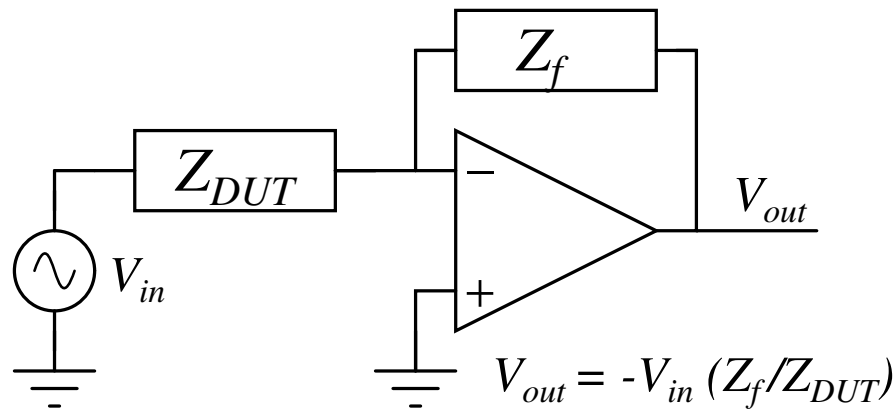

$$\begin{aligned}
V_{out} &= \frac{-Z_f(\omega_A)}{Z_0(\omega_A)} A\cos(\omega_A t) \\
&+ \frac{1}{2}\alpha_1 AB\frac{Z_f(\omega_A-\omega_B)}{Z_0(\omega_A-\omega_B)}\cos((\omega_A-\omega_B)t) \\
&+ \frac{1}{2}\alpha_1 AB\frac{Z_f(\omega_A+\omega_B)}{Z_0(\omega_A+\omega_B)}\cos((\omega_A+\omega_B)t) \\
&+ \frac{1}{4}\alpha_2 AB^2\frac{Z_f(\omega_A-2\omega_B)}{Z_0(\omega_A-2\omega_B)}\cos((\omega_A-2\omega_B)t) \\
&+ \frac{1}{4}\alpha_2 AB^2\frac{Z_f(\omega_A+2\omega_B)}{Z_0(\omega_A+2\omega_B)}\cos((\omega_A+2\omega_B)t) \\
&+ \text{other terms far removed from } \omega_A
\end{aligned}$$

Small-signal impedance

IM2

IM3

System Diagram

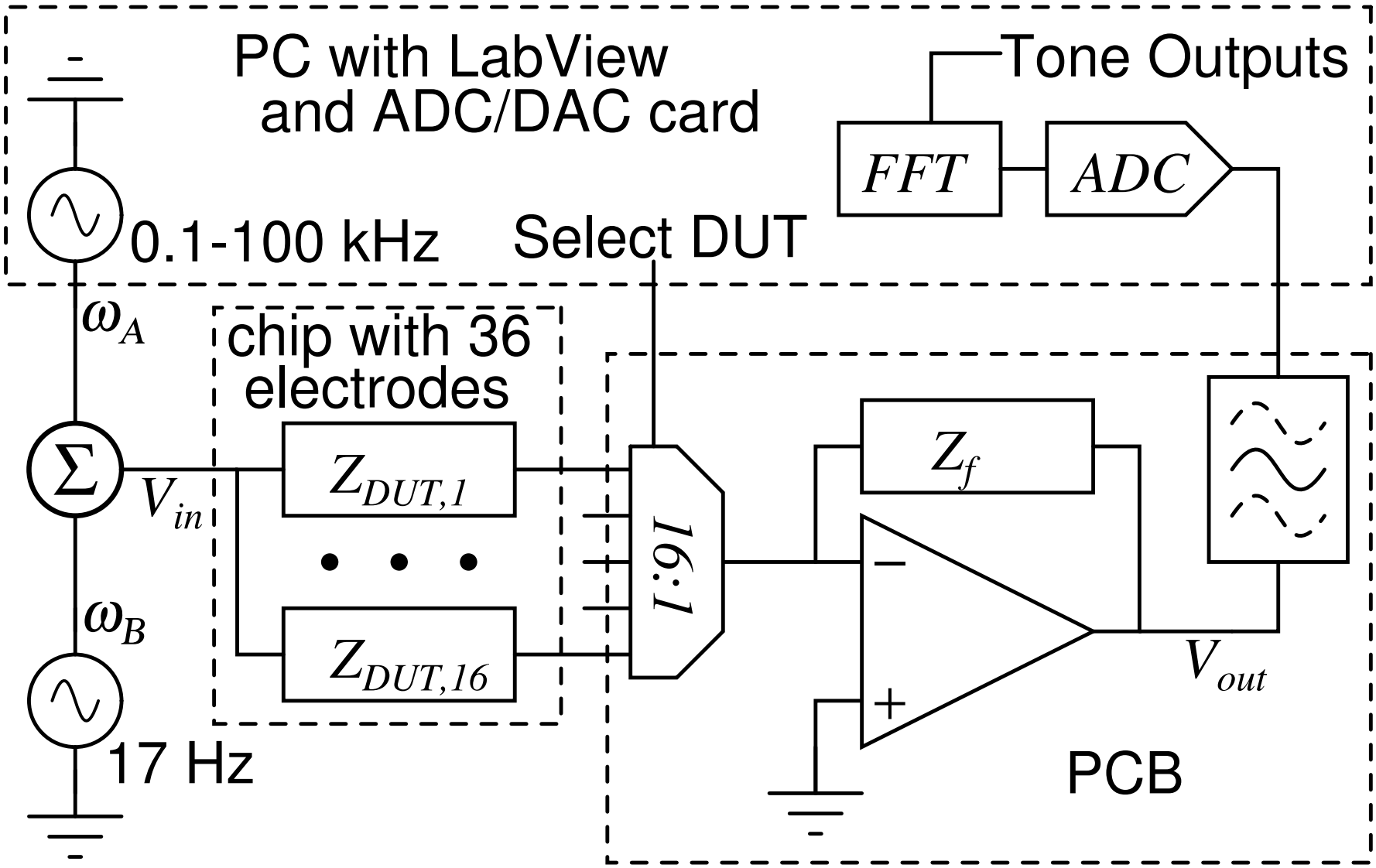

PCB Implementation

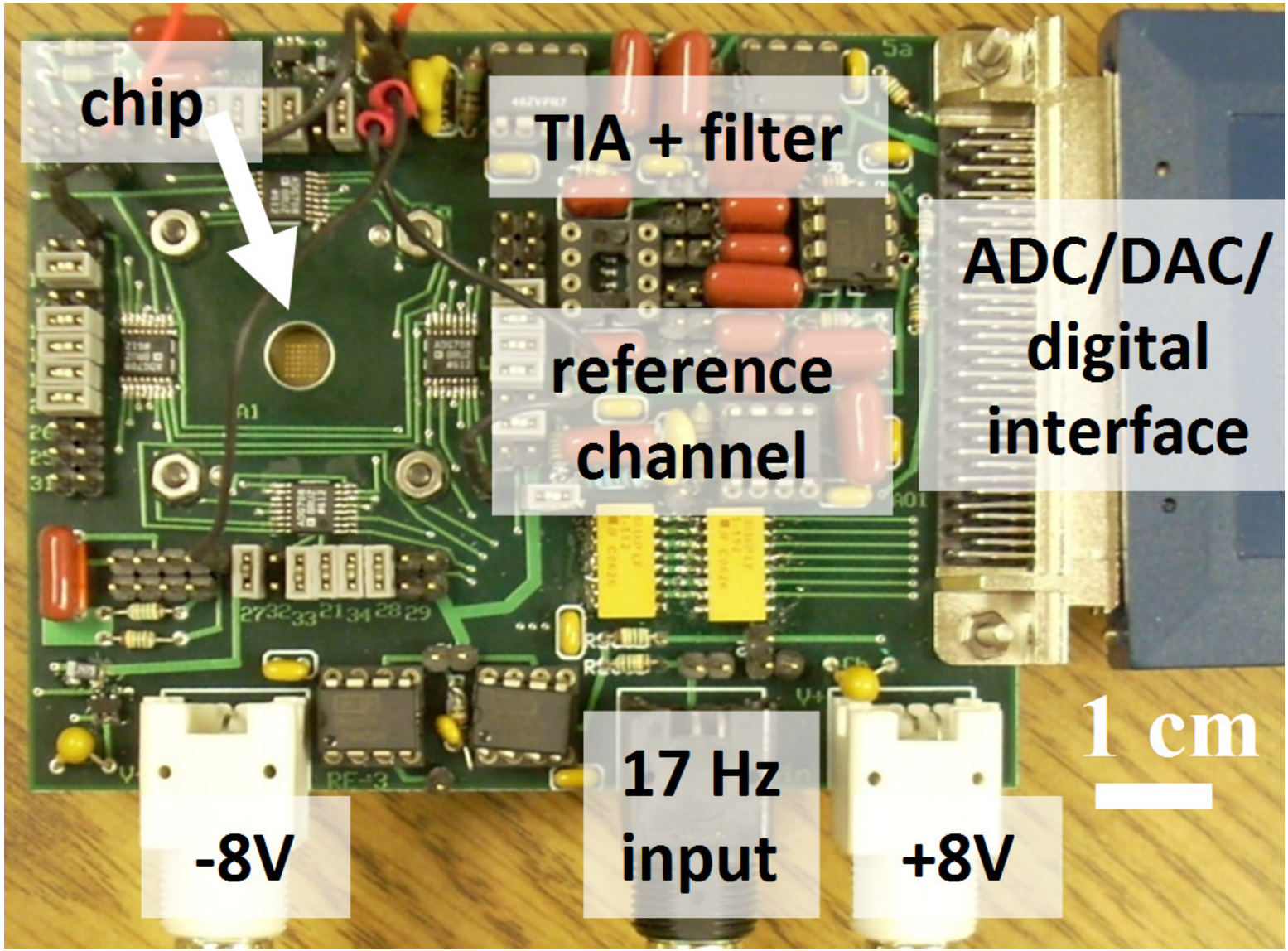

Validating Measurement Approach

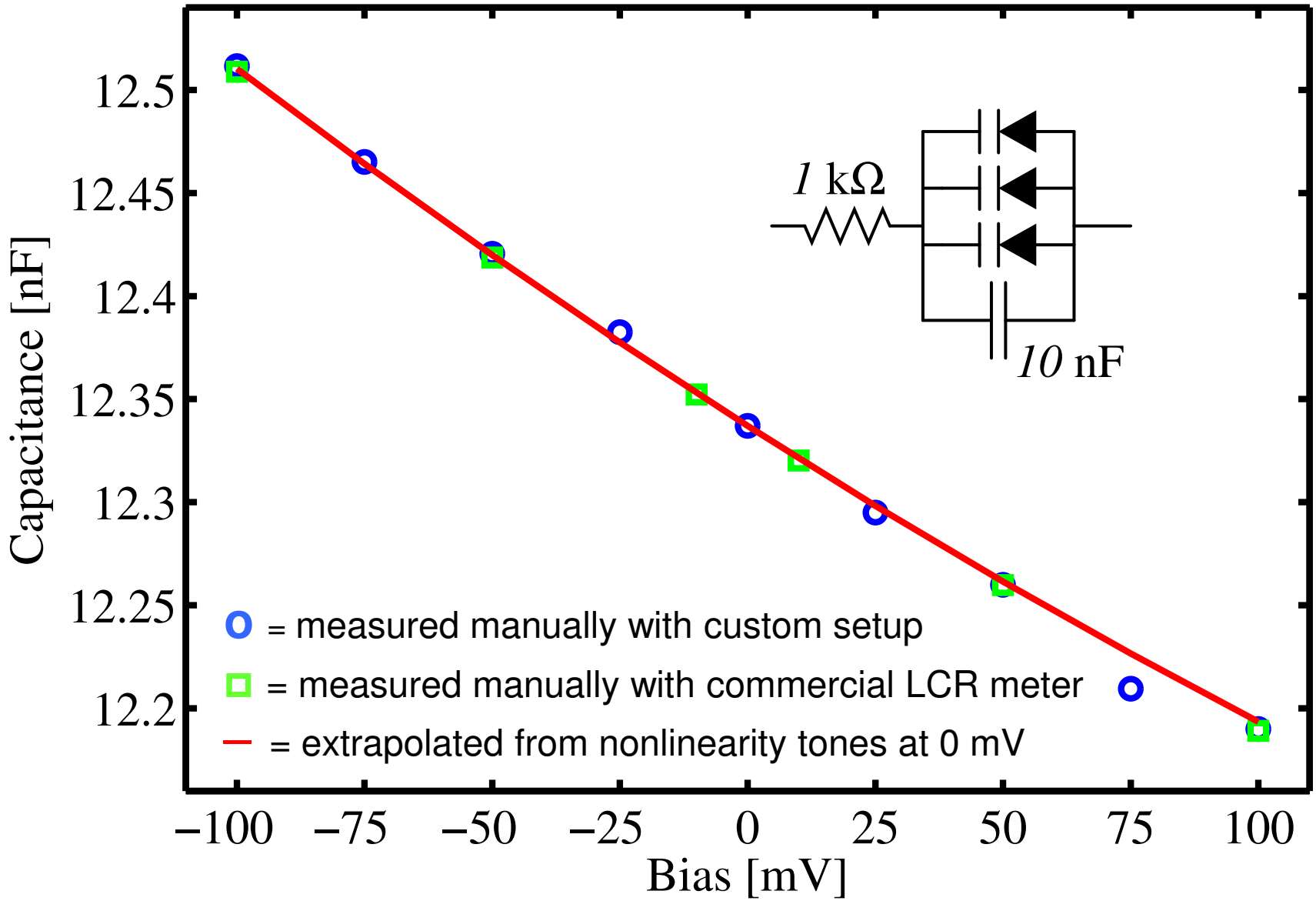

Making "Biology" Happen is Hard

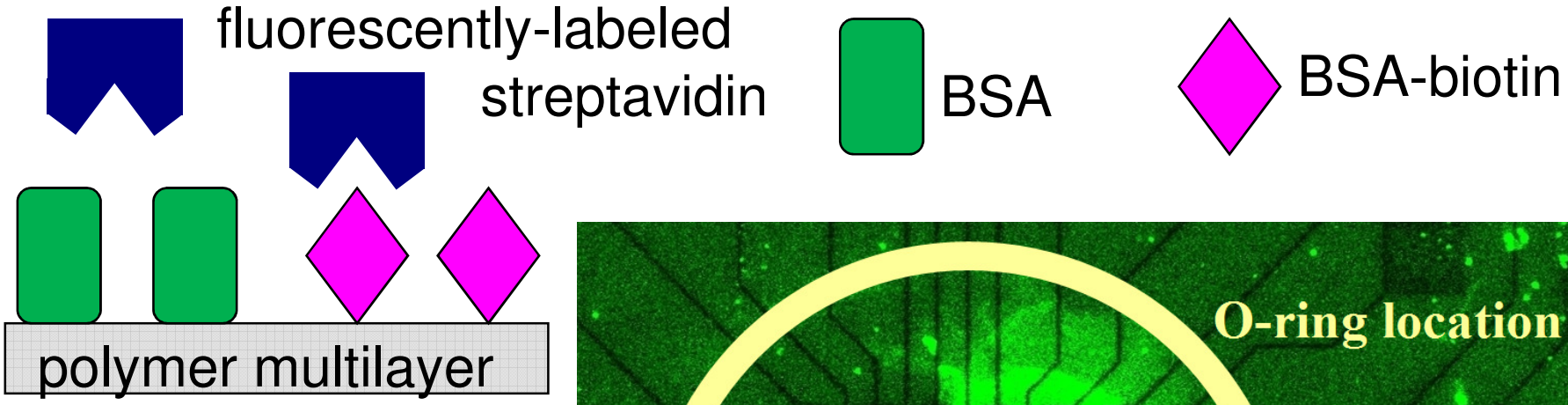

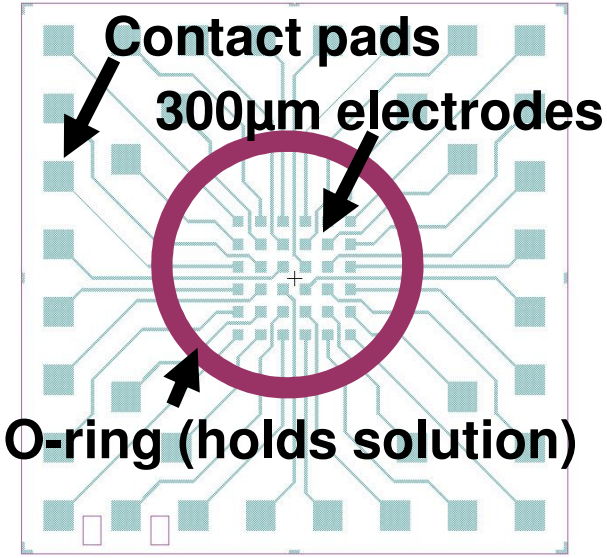

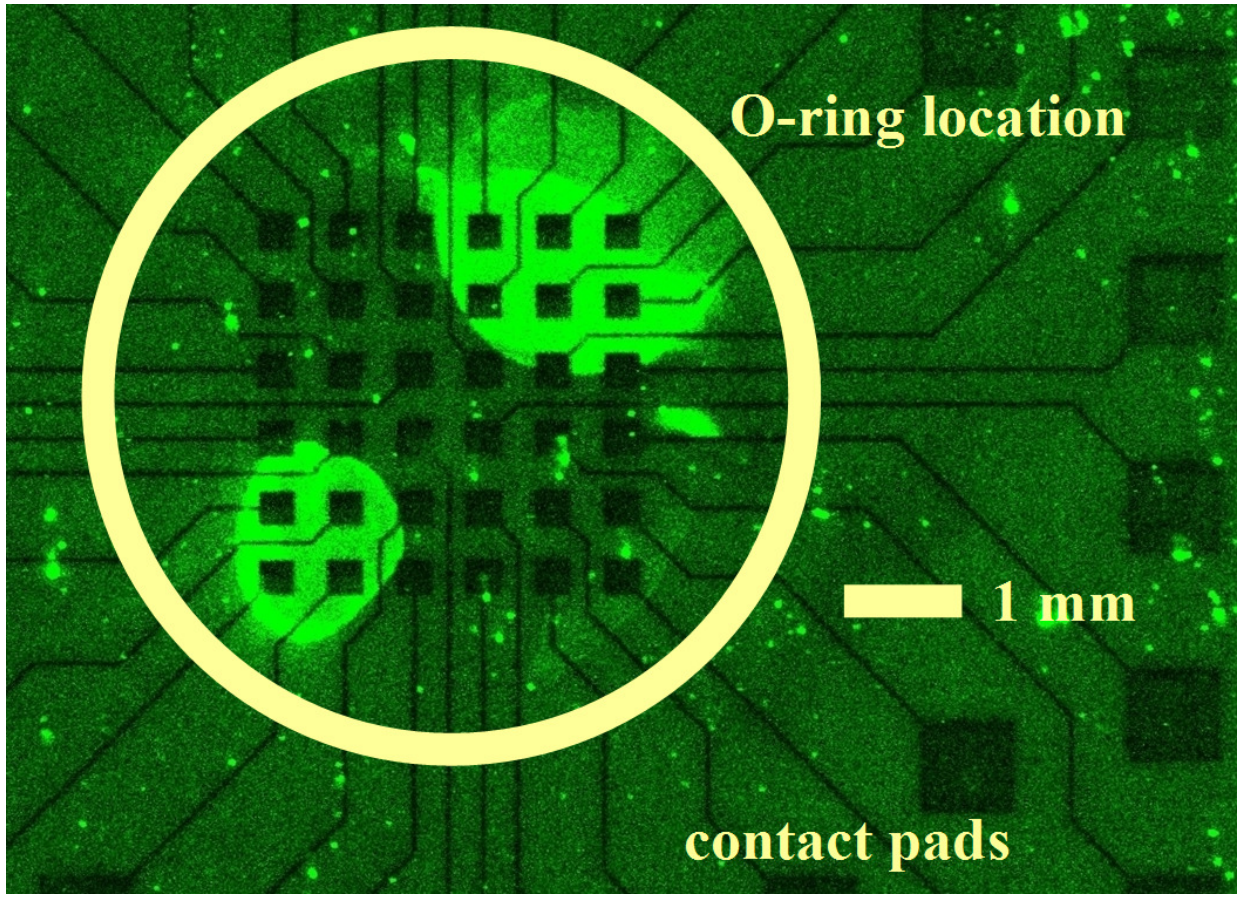

Measured Biological Data

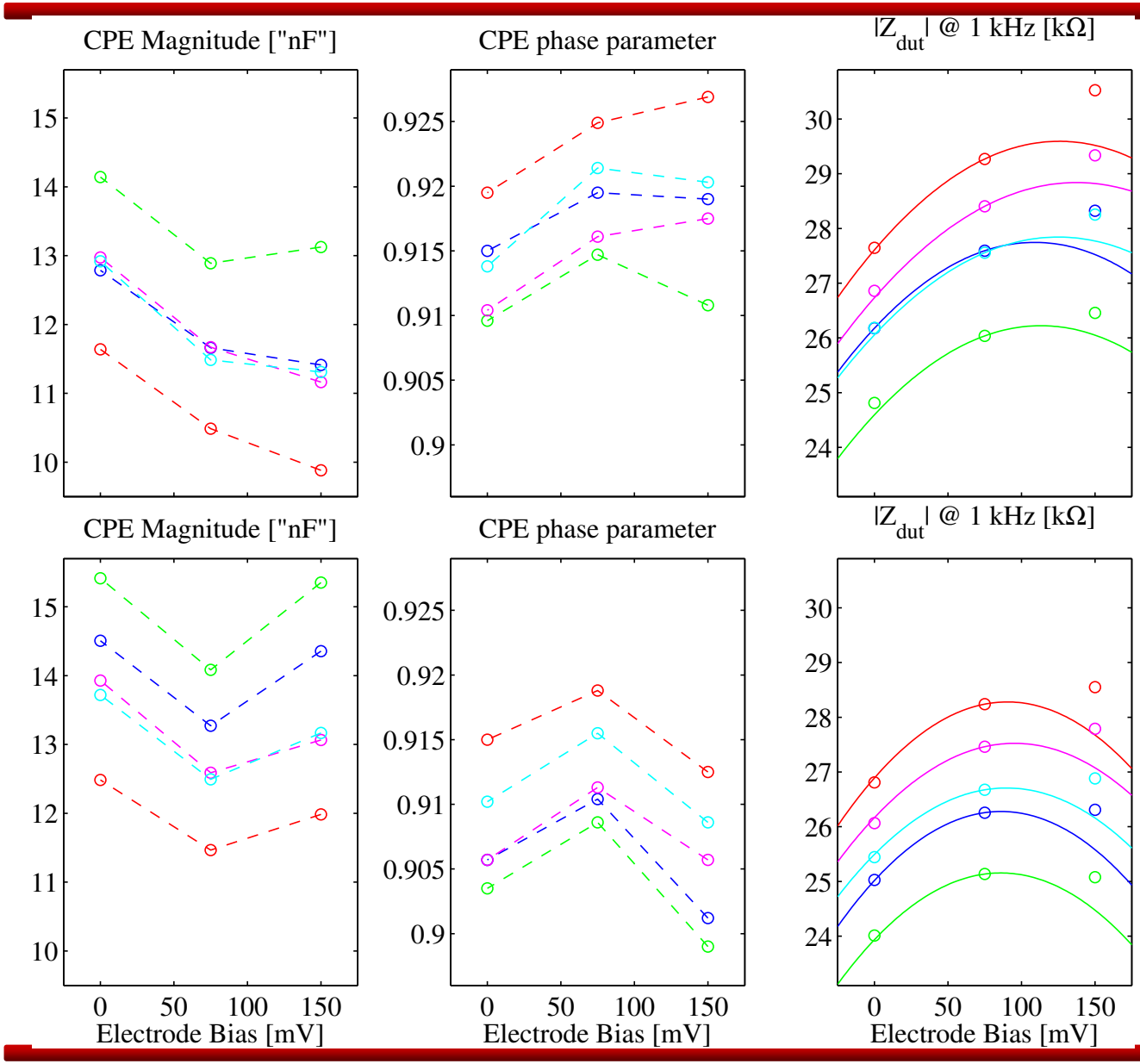

before

after addition of 1 µg/mL avidin

Nonlinearity Indicates Binding

change after addition of 250 ng/mL avidin

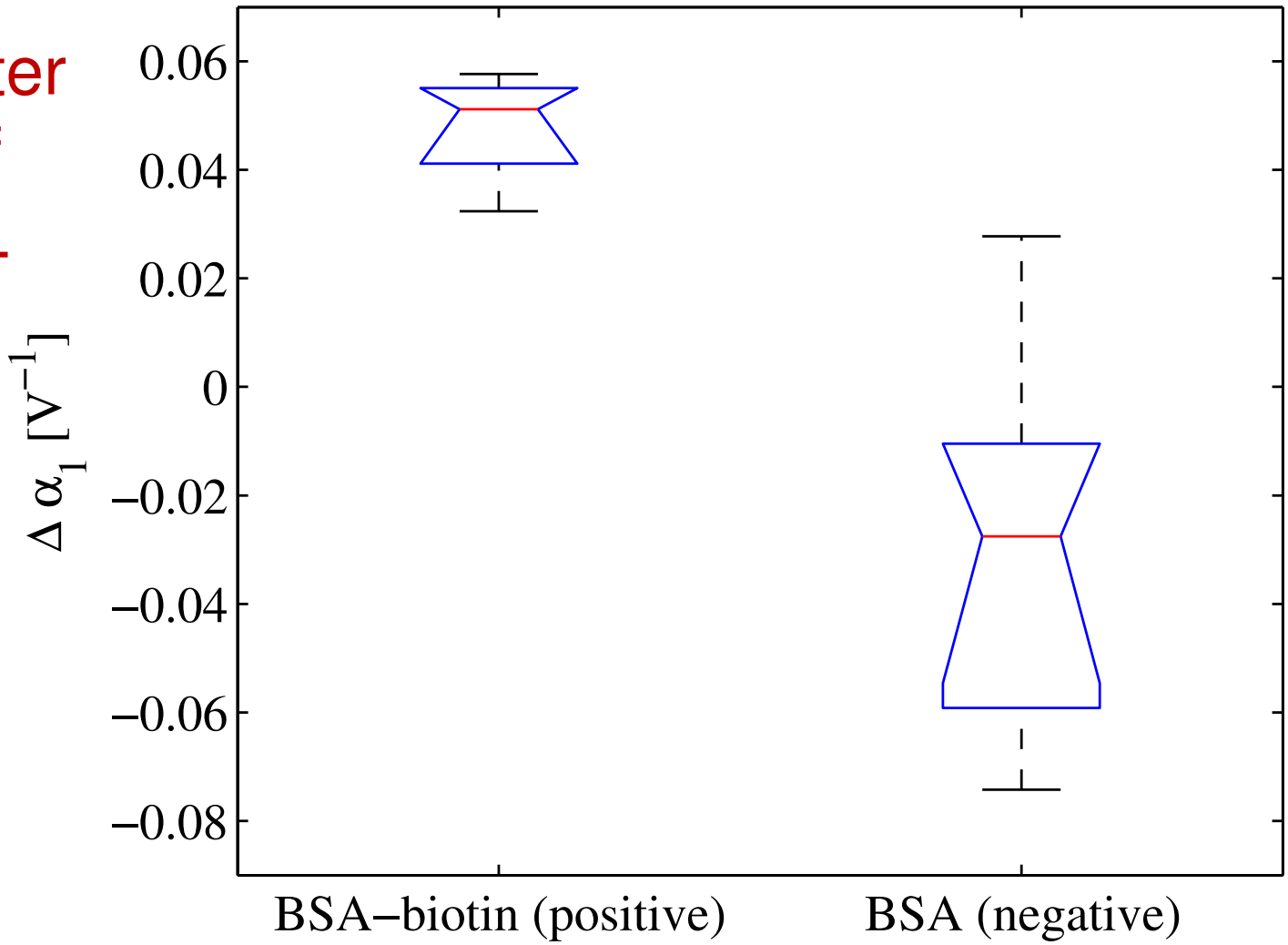

n=4 n=8

Conclusions

- Two-tone approach allows simultaneous measurement of small-signal impedance and nonlinearity
  - No extra measurement time
  - Cost is redesigning measurement apparatus

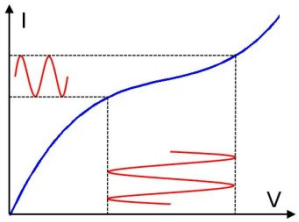

- Nonlinearity can indicate target binding

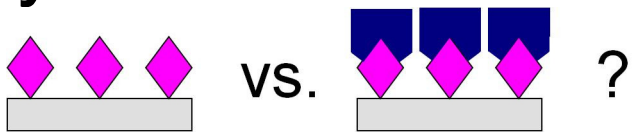

- Nonlinearity appears to be influenced by surface charge
  - Surrogate for field-effect sensor?

Questions?

Suggestions?

Jon.Daniels@stanford.edu

Backup Slides

What is Impedance?

- impedance = measure of opposition to a sinusoidal alternating electric current, generalizing Ohm's law to AC circuit analysis
- impedance = Δvoltage / Δcurrent

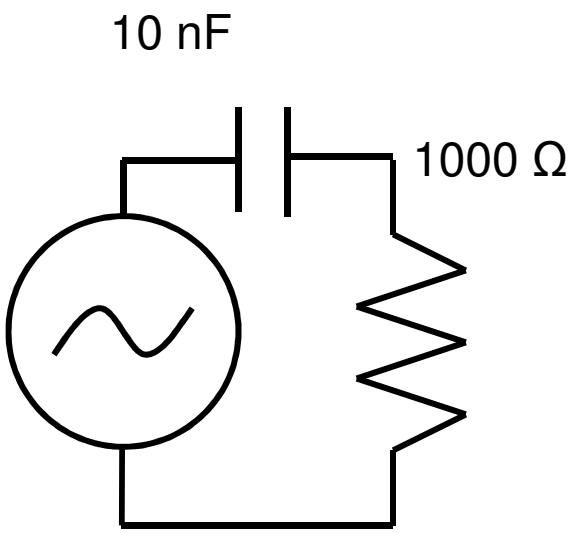

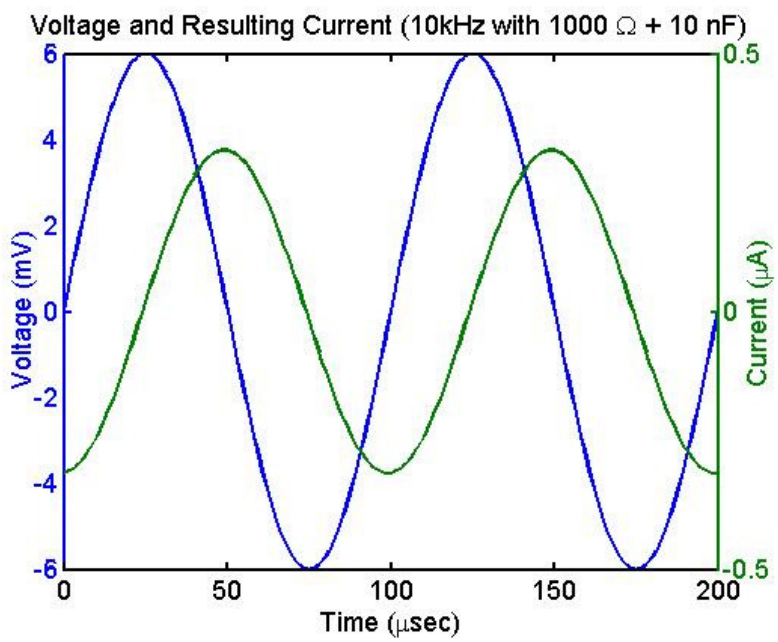

$Z = 1000 + 15915\,j\ \Omega$

$|Z| = 15947\ \Omega$

$\theta_Z = -86.4°$

Impedance Spectroscopy

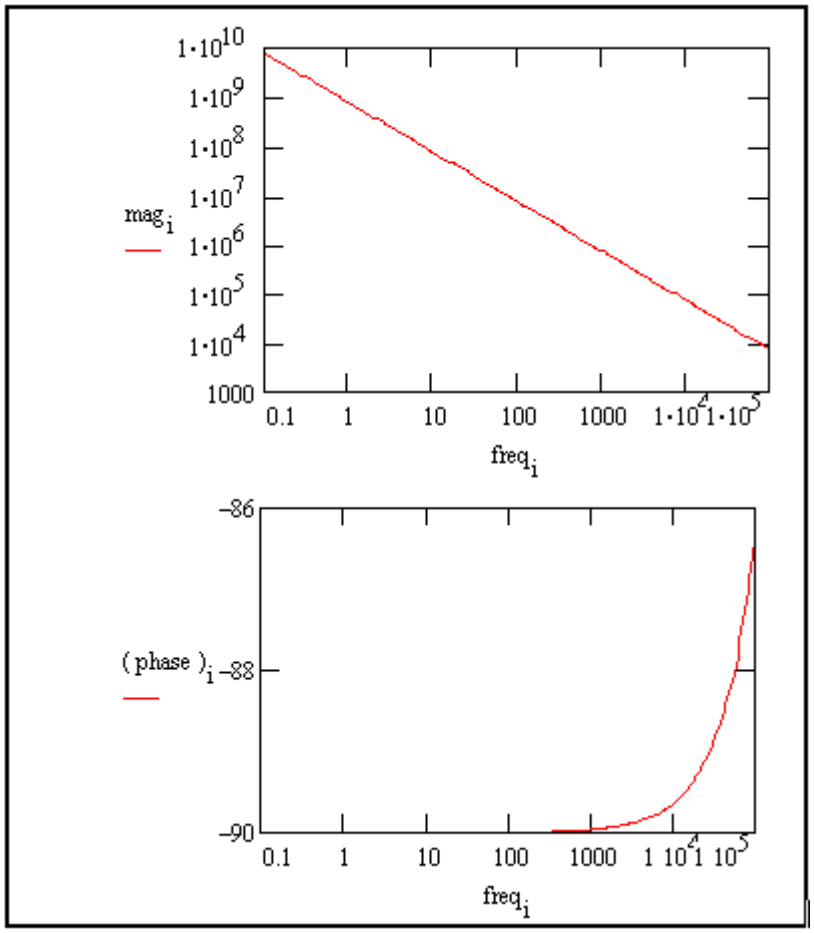

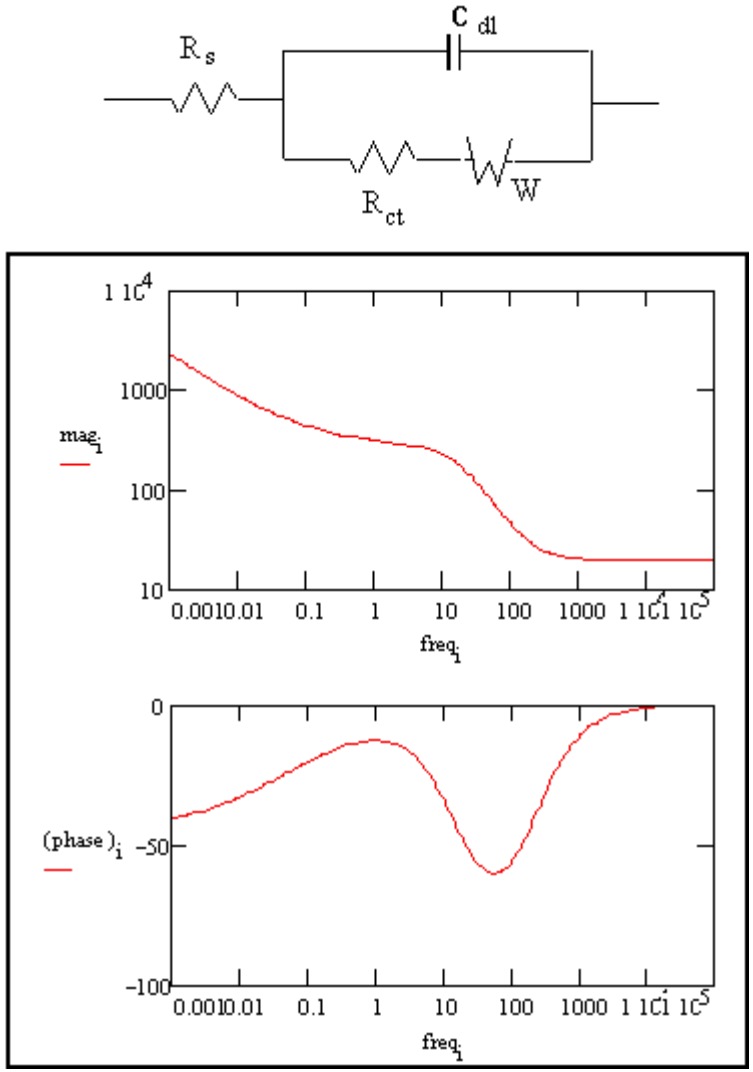

Source: http://www.gamry.com/App_Notes/EIS_Primer/EIS_Primer.htm

Affinity Detection

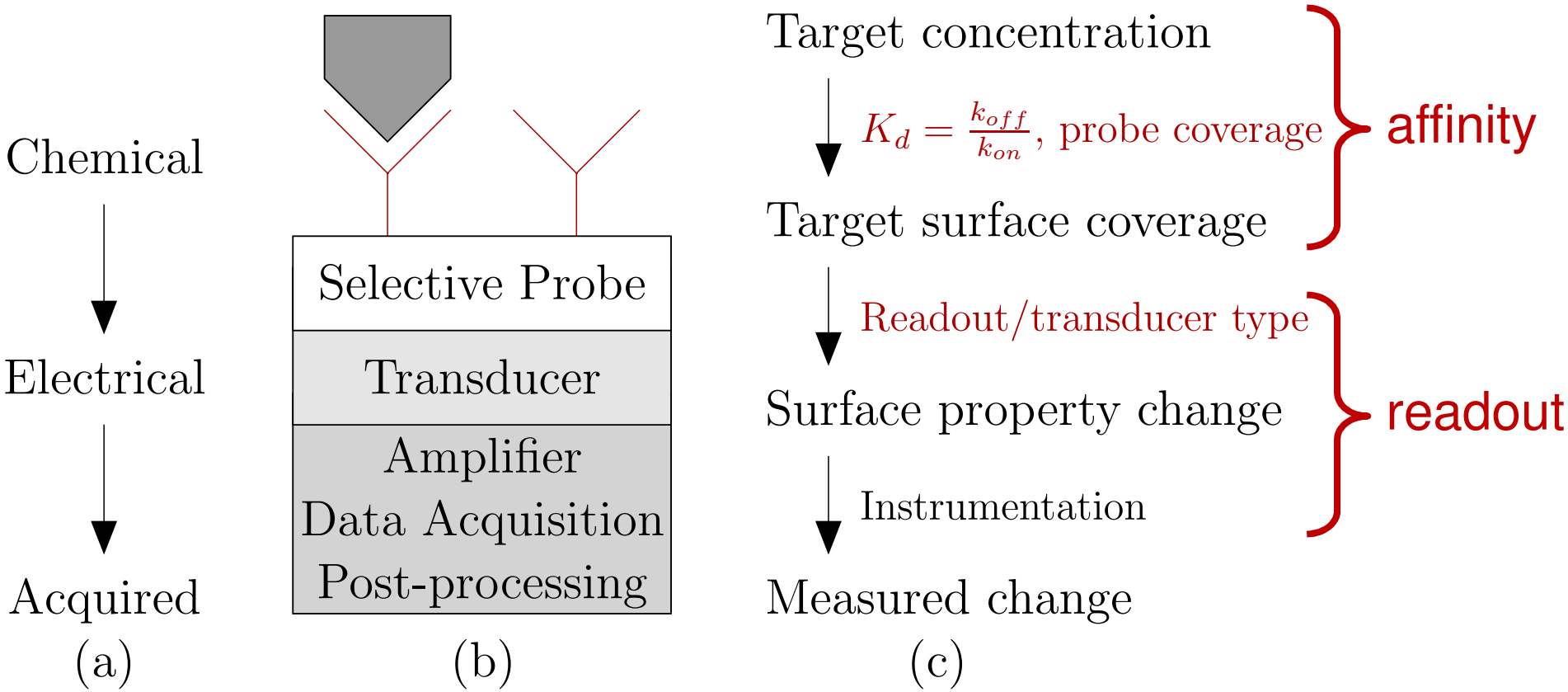

Daniels/Pourmand, Electroanalysis 19:1239-1257 (2007)

Typical Measurement Approach

$10-30k

- Single electrode measurement

Custom Measurement Apparatus

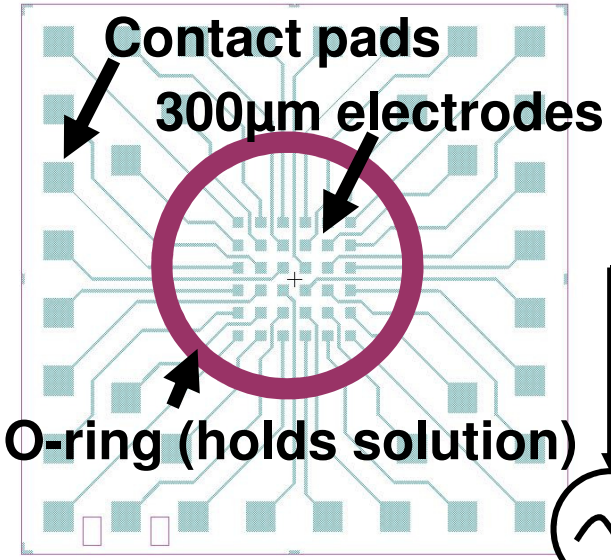

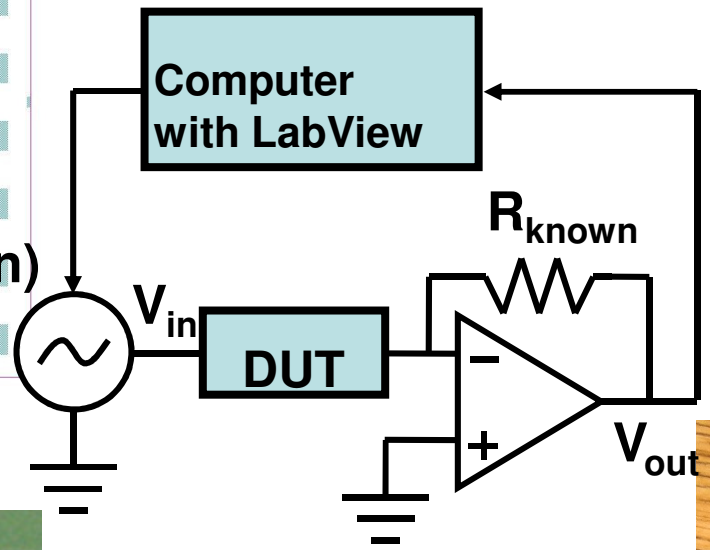

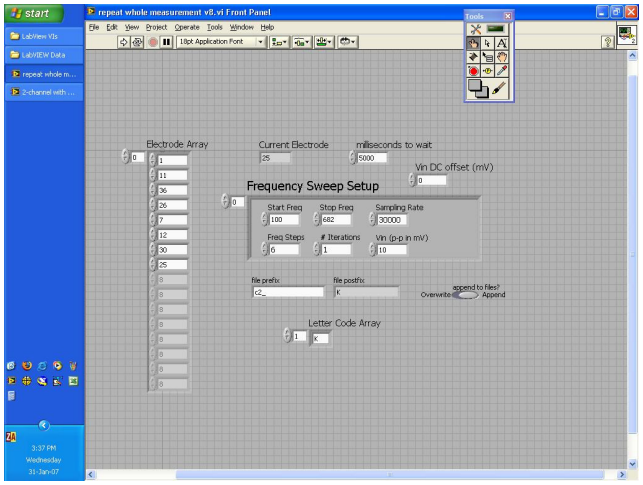

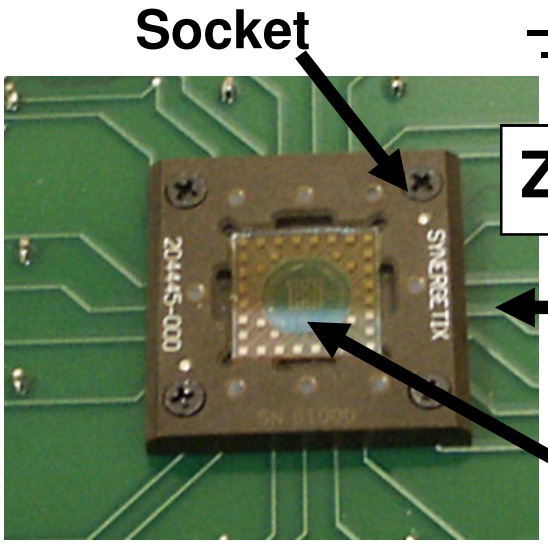

$$Z_{DUT} = -(V_{in}/V_{out})*R_{known}$$

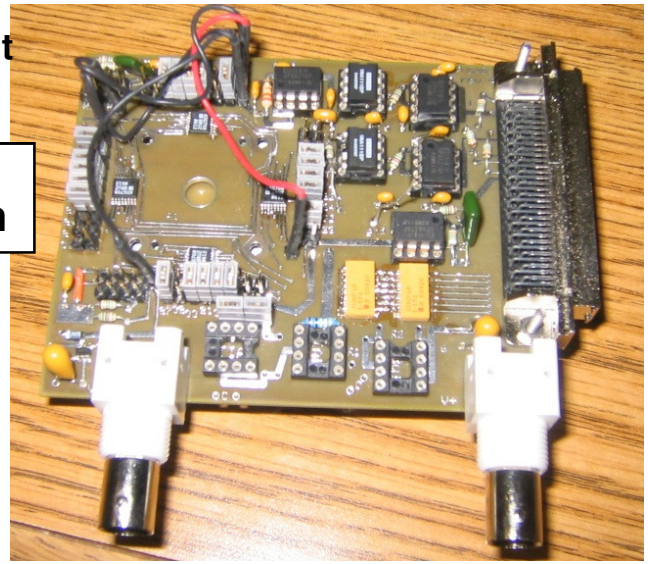

Double Layer Capacitance

$$C_{dl}(\phi) = \left(228\,\mu\mathrm{F/cm}^2\right)\sqrt{\frac{C_0}{\mathrm{mol/L}}}\left(1+\frac{1}{8}\left(\frac{\phi}{V_T}\right)^2\right)$$

- α_2 ~ 188 V^{-2} for double layer capacitance according to Gouy-Chapman model
- Predict α_2 ~ 14 V^{-2} in our measurement based on voltage across ionic layer (vs. interface)
  - expect less due to Stern modification
- We observe $|\alpha_1|$ ~ 0.1-1 V^{-1} and $|\alpha_2|$ ~ 1-10 V^{-2} in all our measurements

Next Steps

- Custom measurement IC design (in progress) and testing
- Explore nonlinear effects with constant phase element?
- Try “real biology”?
- Graduate and get a “real job”!

Acknowledgements

- Nader Pourmand, Prof. Ron Davis (Biochem)
- Erik Anderson, Prof. Tom Lee (ElecEng)
- Heng Yu (surface chemistry)
- Other SGTC personel
- NIH and NSF for direct and indirect funding