30.7 A Programmable Electrochemical Biosensor Array in 0.18µm Standard CMOS

Arjang Hassibi, Thomas H. Lee

Stanford University, Stanford, CA

Biosensors use biological reactions to identify analytes such as DNA molecules, proteins or micro-organisms. These devices intimately couple a biological recognition element (the probe) with a physical transducer to generate an observable signal. The current trend toward creating massively parallel bio-recognition arrays and point-of-care molecular diagnostic systems introduces new technical challenges for the probes, transducers and their detection apparatus. Today, a biosensor platform is required not only to be miniaturized and low cost, but also capable of specifically detecting multiple analytes in parallel.

Electronic biosensors that utilize a combination of electrochemical reactions and electronic sensing are promising candidates for the next generation of integrated biosensors. The basis for high expectations is their compatibility with most biological assays and the low cost of device fabrication. Demonstrating the advantages of semiconductor fabrication processes to create an integrated electrochemical detection platform which meets the stringent specifications of micro-arrays [1], a bio-compatible electrode matrix integrated with allied electrochemical detection circuitry within a single chip built in a standard digital 0.18µm CMOS process with no post-processing steps (Fig. 30.7.1) is described. The individual sensors within this array are programmed by the user to perform customized electrochemical detection procedures. The authors believe this is the first report of a CMOS biosensor array chip capable of performing impedance spectroscopy (IS), amperometric analysis, and, to some degree, cyclic-voltammetry techniques [2]. Prior efforts in this area are limited mostly to ISFET [3] and conduction-based [4] sensor arrays in CMOS compatible processes.

The architecture of the 10×5 CMOS electrochemical biosensor array is illustrated in Fig. 30.7.2. Individual sensor cells (pixels) within this array are operated independently and have their functionality set by a control register in the pixel, accessible by the shared control bus. The array outputs are shared by pixels in each column.

The electrochemical transducer in each pixel consists of two non-faradaic 60µm×60µm aluminum (Al/1%Si) sensing electrodes and a shared common electrode (Fig. 30.7.1). All electrodes are created by making openings in the SiO_2 and Si_3N_4 passivation layer of the CMOS chip using the same process to create ordinary bond pads. In each pixel, one sensing electrode functions as the working electrode *W*, where analyte-specific probes are immobilized, while the other (with no specific binding site) acts as the electrochemical reference replica *R*. To prepare the surface of the working electrodes (essentially Al with a thin coating of native Al_2O_3), silane coupling chemistry or similar methods are used. The common electrode *C*, shared among all pixels, induces bias potentials and other electrical stimuli necessary for electrochemical detection. The dimensions of each pixel, 160µm×120µm, match those of state-of-the-art DNA and protein micro-array spotters. As in conventional affinity-based biosensors and micro-arrays, individual pixels have distinct probes while sharing the same binding buffer solution containing all target analytes.

From an electronic point of view, binding analyte particles to the surface of the working electrode alters the impedance of the electrode-electrolyte interface and, in certain electrochemical arrangements, creates an interfacial potential or a faradic current [2]. This electrode design employs differential sensing by comparing the working electrode characteristic to the reference electrode (Fig. 30.7.3). The pixel-level differential sensing approach in this system potentially suppresses the common-mode electrochemical fluctuations of the electrode surfaces [3], a common predicament in electrochemical transducers. Therefore the output signal of each pixel becomes significantly more binding-specific.

The electrochemical sensor circuitry in each pixel is placed beneath, and is electrically connected to the electrodes (Fig. 30.7.3). The programmable sensor topology consists of two op-amps, a differential amplifier, and nine controllable transmission-gate switches (see Fig. 30.7.4). The op-amp is a gain-boosted folded cascode and all the transistors in the sensor are 0.35µm I/O devices that accommodate a maximum allowable supply of 3.3V (Fig. 30.7.5). Most electroanalysis methods, with perhaps the exception of IS, are low-frequency detection techniques. Hence, the design incorporates a two-phase (Φ and $\overline{\Phi}$) switched biasing approach [5] in all pixel amplifiers to suppress low-frequency fluctuations and 1/f noise. Using this technique 1/f frequency noise is supressed by 6dB and approximately 5×10^{-7} V^2/Hz at 10Hz at the output of the sensors (Fig. 30.7.6). As shown in Fig. 30.7.2, Φ and $\overline{\Phi}$, as well as the common electrode bias potential, reference voltages (V_{b1} and V_{b2}), and all digital control signals, are applied externally.

The array supports various modes of operation. For low frequency impedance spectroscopy and cyclic voltammetry, one needs to measure the differential current between the working electrode and reference when a specified time varying stimulus is applied by the common electrode. To perform such a measurement, S_{11}, S_{13}, S_{21}, and S_{23} are connected to place the external loads in the feedback loop of the transimpedance amplifiers through the L_{11}, L_{12}, L_{21}, and L_{22} lines. As an example, in Fig. 30.7.7 the result of the aforementioned configuration for a simple protein detection procedure is shown. One graph corresponds to the impedance magnitude of the working electrode with bovine serum albumin (BSA) protein on the surface while the other is for the reference electrode without BSA. The biological buffer is 100mM tris-acetate (PH 8.3) at room temperature. BSA immobilization is carried out by 10min incubation in the same buffer containing 0.1% BSA.

The electrical performance of this multi-functional CMOS biosensor chip is competitive with state-of-the-art electrochemical measurement instruments currently used in molecular biology. Its low cost, programmability, versatility and robustness make it an ideal detection platform for the next generation of integrated biosensors for use in medical diagnostic, point-of-care, and environmental applications.

References:
[1] M. Schena, Microarray Analysis, Wiley & Sons, 2003.
[2] A.J. Bard and L.R. Faulkner, Electrochemical Methods: Fundamentals and Applications, 2nd Ed., Wiley & Sons, 2001.
[3] H.-S. Wong and M. H. White, "A CMOS-Integrated 'ISFET-Operational Amplifier' Chemical Sensor Employing Differential Sensing," *IEEE Trans. on Electron Devices*, vol. 36, pp. 497-498, March, 1989.
[4] M. Schienle et al., "A Fully Electronic DNA Sensor with 128 Positions and In-Pixel A/D Conversion," *ISSCC Dig. Tech. Papers*, pp. 220-221, Feb., 2004.
[5] E.A. M. Klumperink et al., "Reducing MOSFET 1/f Noise and Power Consumption by Switched Biasing," *IEEE J. Solid State Circuits*, vol. 35, pp. 994-1001, July, 2000.

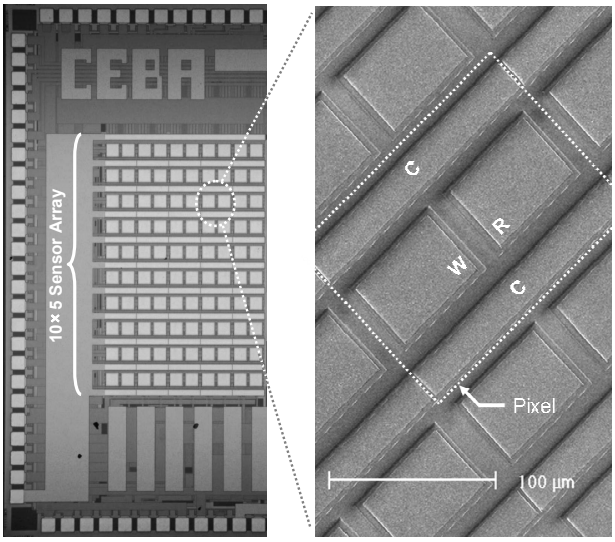

Figure 30.7.1: Test chip micrograph and the SEM picture of the electrodes

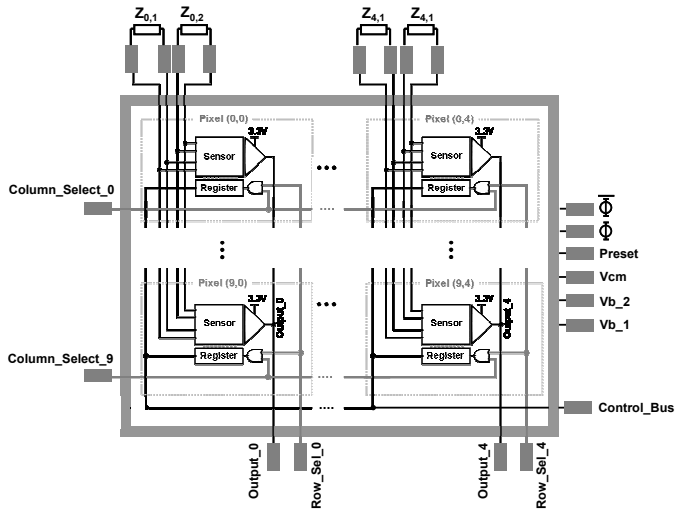

Figure 30.7.2: CMOS electrochemical biosensor array architecture

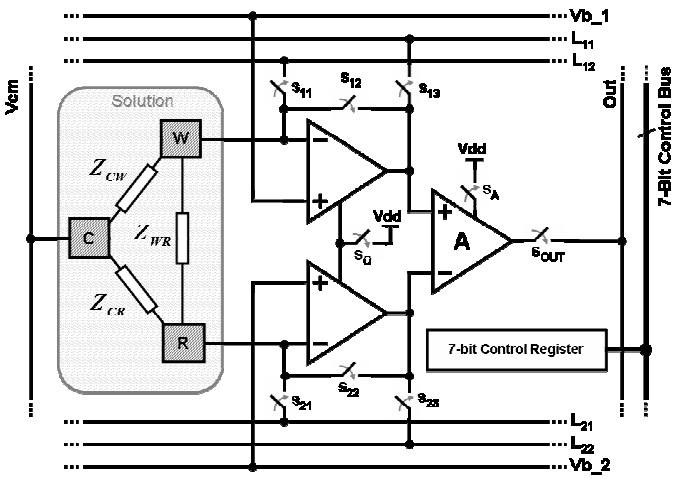

Figure 30.7.3: The programmable electrochemical sensor topology

Chip	
Technology	0.18µm CMOS, 5 metal layers
Die size	3mm×1.4mm
Number of transistors	15050 (50×301)
Power consumption	240mW (3.3V supply)
Inputs	Vdd, Gnd, V_{bn}, V_{bp}, ctrl_bus[0,6], V_{b1}, V_{b2}, V_{cm}, Φ, $\overline{\Phi}$, preset, col_sel[0,4], row_sel[0,9]
Outputs	Output[0,4]
Sensor Array	
Array size	10×5
Pixel size	160µm×120µm
Typical operation modes	Impedance spectroscopy, ISFET, amperometric
Opamp spec.	Gain (83dB), CMRR (105dB), power (2.2mW), BW (95MHz), PM (52º), CM input range (1.1V), output swing (1.05V)
Diff. amp spec.	Gain (34dB), CMRR (71dB), power (0.5mW), BW (165MHz), CM input range (1.1V), output swing (1.5V)
Electrode spec.	60µm×60µm Al/1%Si, 0.12µF/mm^2 contact cap.
Load line	54Ω series resistance, 85fF shunt cap. *
Temperature spec.	2.3ºC increase at surface with 44 LDCC package
Noise (pixel output)	1.17mV r.m.s
Sensitivity	50V/V (ISFET mode), 500V/nA/s (amperometric mode, 100pF integrator cap.)

Figure 30.7.4: Electrical performance (*from simulation)

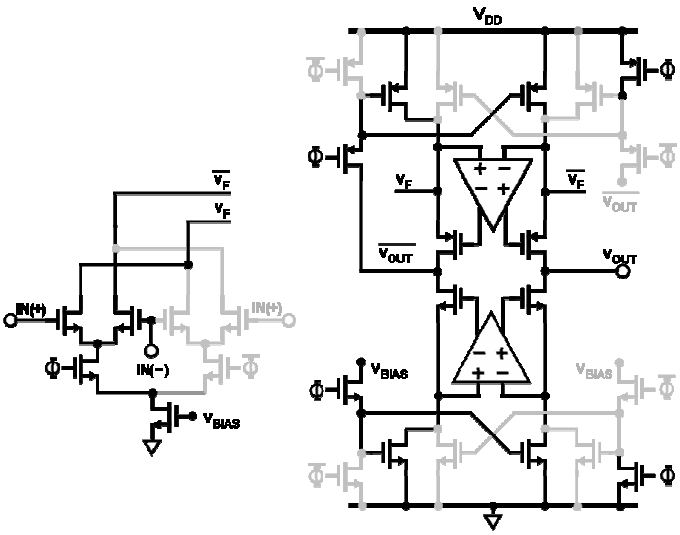

Figure 30.7.5: Op-amp with switched-biasing

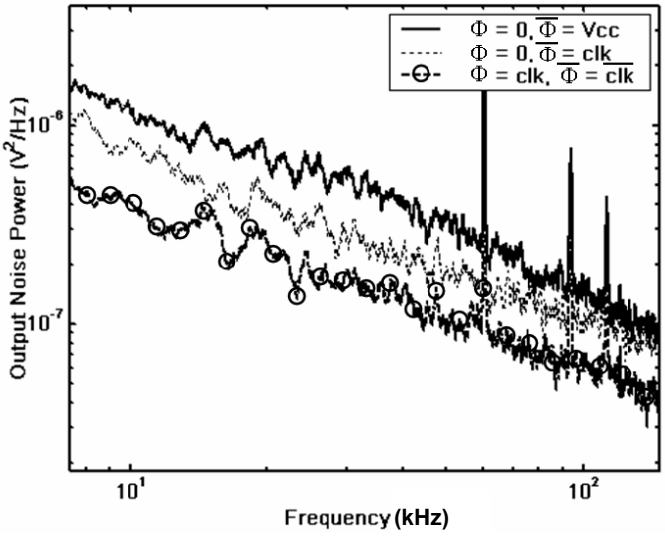

Figure 30.7.6: Output noise power spectral density with switched-biasing

Continued on Page 000

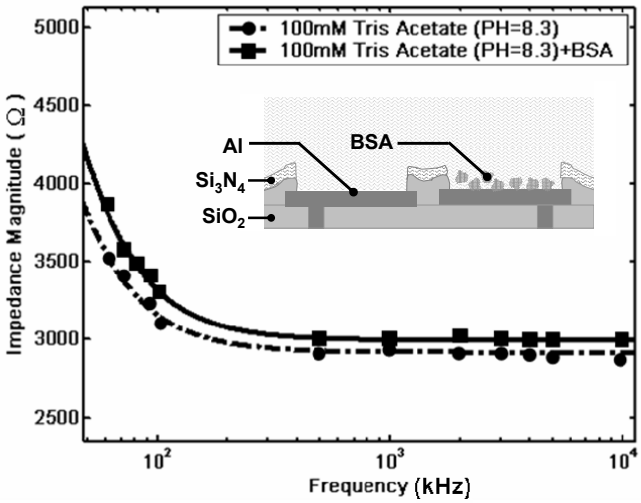

Figure 30.7.7: Impedance magnitude of electrode-electrolyte interface with and without bovine serum (BSA) on the electrode surface

 0-7803-7335-9/02/$17.00